English

User's Guide

⚠ Warning ● Please read the safety instructions booklet before setting up the projector.

• This manual covers only basic operations, including how to set up the projector, and basic projector operations. For more detailed information, see the Reference Guide on the CD-ROM that comes with the projector.

Contents

Unpacking 2
Using the User Documentation on the CD-ROM 2
Register with InFocus 2
Important Lamp Information 2

General Guide 3
Remote Controller General Guide 5
Preparing the Remote Controller 5
Replacing the Remote Controller Battery 6

Getting Ready 7
Setting Up the Projector 7
Screen Size and Distance 7
Adjusting the Projector Elevation Angle 8
Rear Projection (From the Back of the Screen) 8
Connecting a Computer to the Projector 9
Connecting to a Standard Video Device 9
Turning On the Projector 10
Turning Off the Projector 12

Projector Basics 13
Selecting the Input Source 13
Adjusting the Projected Image 13
Keystone Correction (KEYSTONE) 14

Using the Setup Menu 15

Troubleshooting 16
Indicators 16
Projector Troubleshooting 20

Service and Support 22

Unpacking

As you unpack the projector, check to make sure that all of the items listed below are present.

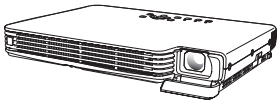

PROJECTOR



Remote Controller



Battery (CR2025)
(Loaded in remote controller.)



AC Power Cord



Video Cable



Mini D-Sub Cable

- Soft Cases (projector and cords)
- CD-ROM with Reference Guide
- Printed User's Guide
- Safety booklet
- Warranty booklet
- Registration card

Using the User Documentation on the CD-ROM

The CD-ROM that comes with the projector has a PDF file “Reference Guide” that contains detailed explanations about projector operations.

In order to read the Reference Guide, you need to have Adobe® Reader® installed on your computer. If you don't, go to www.adobe.com to download and install it.

Register with InFocus

It's quick, easy, and secure.
Activate your warranty to ensure eligibility for service and support. Get special offers and notifications about free product updates.

Go to www.infocus.com/register

Important Lamp Information

The lamp originally installed in this projector is model SP-LAMP-035, which is intended for tabletop (non-inverted) use. Do not use this lamp in ceiling mounted (inverted) applications. For ceiling mount (inverted) application, use lamp model SP-LAMP-036 instead, which is specifically designed for that purpose. Use of the wrong lamp will significantly reduce lamp life and void the lamp warranty (and if use of the wrong lamp results in damage to the projector, it will also void the projector warranty).

See the safety instructions booklet for important safety information about ceiling mounting this projector.

General Guide

[Front/Top/Left Side]

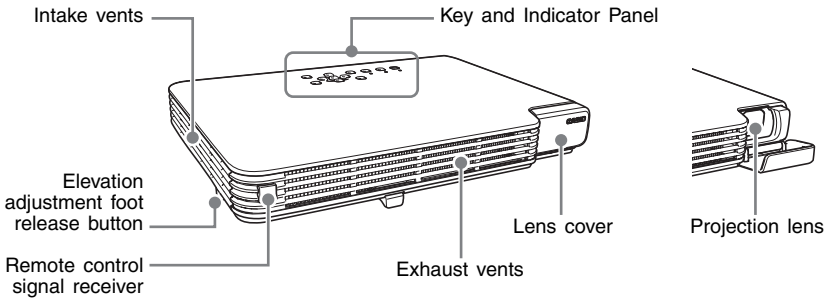

[Key and Indicator Panel]

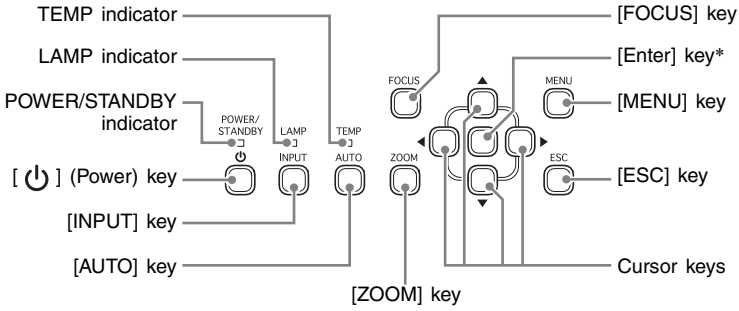

* The projector's enter key does not have anything printed on it. When you see [ENTER] in this manual, it means you should press the projector's enter key or the [ENTER] key of the remote controller.

⚠ **Warning**	● Never look into the lens while the projector is turned on. ● Never allow the intake and exhaust vents to become blocked, and make sure there is at least 30 cm (11.8 inches) clearance around the projector. Blocked vents can cause heat to build up, creating the risk of fire and malfunction. ● Never touch the areas around the exhaust vents. These areas can become very hot, and create the risk of burn injury.

[Bottom]

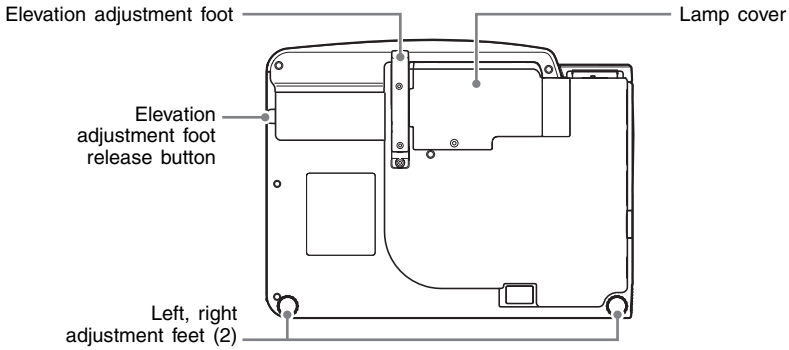

[Back, Terminals]

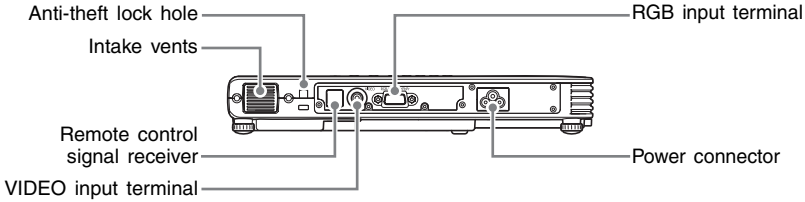

⚠ Warning	● In the unlikely event of a lamp rupture, particles may be ejected from the projector. Keep out of the area under and around the projector when it is turned on. See the safety instructions booklet for more details.

NOTE

● The anti-theft lock hole is provided for connection of an anti-theft chain.

Remote Controller General Guide

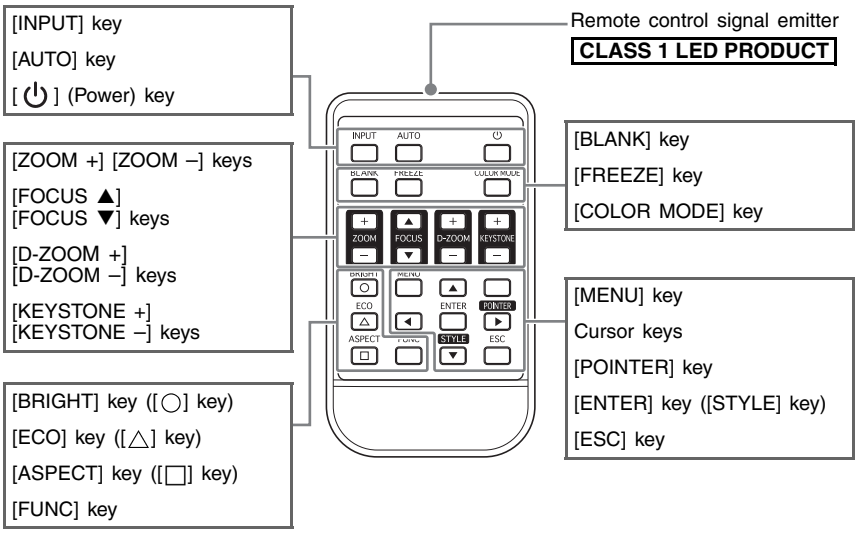

Preparing the Remote Controller

The remote control unit comes loaded with a test battery. Before using it for the first time, remove the battery insulation sheet from the back of the remote controller.

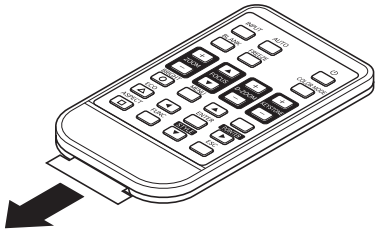

Important!

- To avoid running down the battery, store the remote control unit so its buttons are not pressed inadvertently.

Replacing the Remote Controller Battery

Before you can use the remote controller for the first time, you need to load the battery that comes with it.

⚠ Caution	RISK OF EXPLOSION IF BATTERY IS REPLACED BY AN INCORRECT TYPE. DISPOSE OF USED BATTERIES ACCORDING TO THE INSTRUCTIONS.

⚠ Caution	Misuse of a battery can cause it to leak and stain the area around it, or to explode, creating the risk of fire and personal injury. Make sure that you always observe the following precautions. ● Take care that the battery is oriented correctly when you load it. ● Use only battery type that is specified for use with the remote controller.

1. Hook your fingernail on the groove of the battery holder on the back of the remote controller. While holding down the release on the side (①), pull out the holder (②).

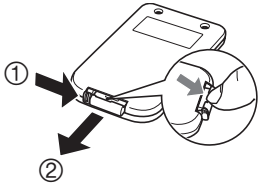

2. Place the battery (CR2025) onto the battery holder.

- Make sure that the plus (+) side of the battery is facing upwards (so you can see it). Take care that you do not install the battery upside down.

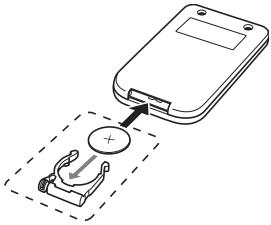

3. Replace the battery holder back into the remote controller.

Getting Ready

Setting Up the Projector

Locate the projector on a desk, table, or stand that is firm and level. Make sure to allow sufficient space around the sides and back of the projector for proper ventilation.

- The following illustrations show how the projector should be oriented for optimum projection relative to the screen.

Viewed from Above

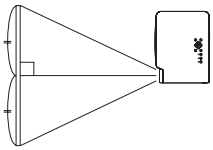

The center of the projector's lens should be aligned with the horizontal center of the screen.

Viewed from the Side

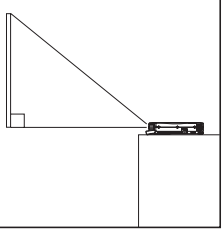

Make sure the projector is at a right angle to the screen.

Important!

- You can place the projector on a surface that is angled up to 30 degrees upwards or downwards during use. Never locate the projector on a surface that is angled more than 30 degrees, or angled at all to the left or right. Such conditions can cause the lamp to explode or can shorten lamp life, and also creates the risk of malfunction.
- The projector's auto keystone correction range is 0 to +30 degrees. If the surface you are projecting onto is angled downwards from horizontal, use manual keystone correction (page 14) to correct the image.

Screen Size and Distance

Diagonal Screen Size		Approximate Projection Distance			
Inches	cm	Minimum Distance (m)	Maximum Distance (m)	Minimum Distance (feet)	Maximum Distance (feet)
40	102	1.1	2.2	3.61	7.22
60	152	1.7	3.4	5.58	11.15
80	203	2.3	4.5	7.55	14.76
100	254	2.8	5.6	9.19	18.37
150	381	4.3	8.5	14.11	27.89
200	508	5.7	11.3	18.70	37.07

Important!

- Note that the distances provided above are for reference only.

Interactive screen size and distance calculator
www.infocus.com/calculator

Adjusting the Projector Elevation Angle

You can change the elevation angle of the projector in a range of 0 to 12 degrees. You can also make fine adjustments to the left and right side elevation angle when necessary.

To change the projector elevation angle

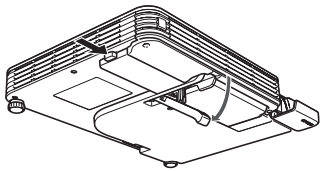

1. Lift up the front of the projector and press the release button.
   - This causes the elevation adjustment foot to drop from the bottom of the projector.
   - Be sure to press the release button before trying to lower the elevation adjustment foot. Pulling on the foot without pressing the release lever can damage the foot.
2. While holding down the release button, raise and lower the front of the projector until the elevation adjustment foot is approximately the length you need.
3. Release the release button to lock the elevation adjustment foot in its current position.
4. Use the left and right adjustment feet to further fine adjust the elevation angle.
   - The left and right adjustment feet are for fine adjustment only. Do not try to rotate them too far. Doing so can cause an adjustment foot to detach. Tightening an adjustment foot too strongly can cause it to become stuck.

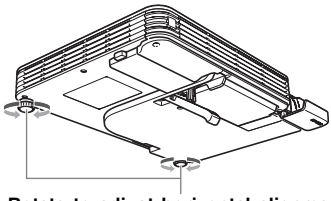

Rotate to adjust horizontal alignment.

Important!

- To retract the elevation adjustment foot, hold down the release button and slide the elevation adjustment foot back into the projector. Never try to forcibly change the elevation adjustment foot position without pressing the release button.

Rear Projection (From the Back of the Screen)

In the case of rear projection, left/right orientation is opposite that of front projection, so you need to configure the setup menu accordingly. For more detailed operation information, see the Reference Guide on the CD-ROM that comes with the projector.

Connecting a Computer to the Projector

You can use the projector to project an image of video output from a computer.

Important!

- Always turn off the projector and the computer before connecting them.

Projector

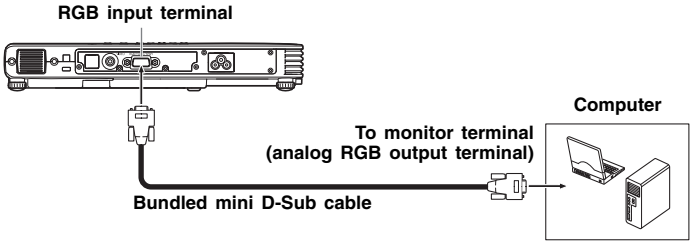

Connecting to a Standard Video Device

You can use the projector to project an image from a video deck, TV, video camera, or other video device.

Important!

- Always turn off the projector and the video device before connecting them.

Projector

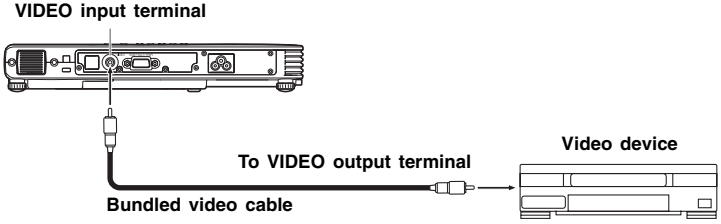

- You can use the bundled video cable to connect to a pin jack (RCA) type VIDEO output terminal. When connecting a video camera or other video device with a special video output terminal, use the special cable that comes with the video device. For details, see the documentation that comes with the video device.

NOTE

- The RGB input terminal can be connected to the component video terminal of video equipment using an optionally available adapter. For more information, see “Connecting to a Component Video Output Device” in the Reference Guide on the CD-ROM that comes with the projector.

Turning On the Projector

Before performing any of the operations in this section, make sure you first set up the projector and connect to an output device.

AC Power Cord Precautions

- Use the AC power cord that comes with the projector.
- Make sure that you use a power source with the same voltage as that specified for the projector.
- Do not share the outlet supplying power to the projector with other devices. If you are using an extension cord, make sure that the ampere rating of the extension cord is compatible with the power consumption value of this projector.
- Never use the power cord while it is still bundled together.
- Never place objects on top of the power cord and do not step on it.
- Never pull on the power cord. When unplugging it, grasp the plug.
- Use a conveniently located power outlet that you can reach easily when you need to unplug the projector.

To turn on the projector

1. Use the bundled AC power cord to plug the projector into a power outlet.
- Plugging into a power outlet causes the three indicators on the top of the projector to light amber. After a short while, two of the indicators will go out and only the POWER/STANDBY indicator will remain lit amber, which indicates the standby state.
- Note that the projector will not turn on if you press the [⏻] (power) key while all three indicators are lit amber. Wait until the projector is in the standby state before trying to turn it on.

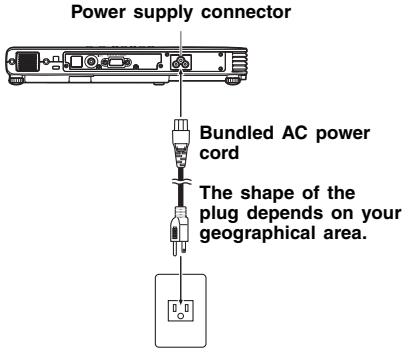

NOTE
- This product is also designed for IT power distribution system with phase-to-phase voltage 230V.

2. Turn on the computer or video device that is connected to the projector.

3. If the projector's lens cover is closed, open it.
- Do not try to force the lens cover open past horizontal. Doing so creates the risk of malfunction.

4. Press the [⏻] (power) key.
- This causes the POWER/STANDBY indicator to flash green, which indicates that the projector is warming up.
- After warm up is complete, POWER/STANDBY indicator stops flashing and remains lit green, and the projector starts projecting an image from the device connected to it.
- A "Language" window will be projected the first time you turn on the projector. Use the procedure under "Specifying the Display Message Language" on the page 11 to configure the language settings.

NOTE

- If the Eco Mode is turned on, the LAMP indicator will light green when warm up starts.
- If the projector is hot when you plug the AC power cord into a power outlet, it will go into a cool down state. The cool down state is indicated by the POWER/STANDBY indicator flashing orange.
  Note that the projector will not turn on until cool down is complete, even if you press the [⏻] (power) key.
  The projector will turn on and enter the standby state after cool down is complete.

Specifying the Display Message Language

A “Language” window will be projected the first time you turn on the projector. Use the menu on this screen to specify the display language you want to use.

1. Use the cursor [▲] and [▼] keys to highlight the language you want to use.



2. Press the [ENTER] key.

Direct Power On

You can configure the projector so it powers up automatically as soon as you plug it into a power source. With this “Direct Power On” feature, you do not even need to press the [⏻] (power) key. To enable Direct Power On, display the Setup Menu, and then change the “Direct Power On” setting to “On”.

Important!

- When you have Direct Power On enabled, do not leave the projector plugged into an electrical outlet while it is turned off. If you do, there is the chance that it (and the lamp) might turn on automatically when power is restored after being cut off by a power outage, tripping of a breaker, etc.

NOTE

- Direct Power On causes the projector to turn on automatically as soon as it is plugged into a power outlet. This greatly reduces the amount of time it takes until you are ready to start projecting. Note, however, that the actual startup sequence (Standby State → Power On → Warm Up → Projection Starts) that the projector performs is the same, regardless of whether Direct Power On is enabled or disabled. The only difference is what triggers the sequence (plugging in or pressing the [⏻] (power) key). For details about the startup sequence that the projector performs when you plug it into a power source, see “To turn on the projector” on page 10.
- For details about configuring the Direct Power On setting, see “Direct Power On” under “Option Settings 1 Main Menu” in the Reference Guide on the CD-ROM that comes with the projector.

Turning Off the Projector

Caution

- When you turn off the projector, the lamp goes out and the projector goes into a cool down state. Note that you will not be able to turn the projector back on again while it is cooling down.
- The projector may remain quite hot for a while after you turn it off. Take care when moving the projector or otherwise handling it after use.
- Make sure that the projector is cooled down sufficiently before storing it.

To turn off the projector

1. Press the [⏻] (power) key.
   - This causes the confirmation message “Do you want to turn off the projector?” to appear in the center of the projection screen.
   - If you do not turn off the projector the confirmation message will disappear automatically after about 10 seconds. The confirmation message will also disappear if you press [ESC] key.
2. To turn off the projector, press the [⏻] (power) key again in response to the confirmation message.
   - This causes the projector lamp to go out and stops projection.
   - Also the POWER/STANDBY indicator starts to flash amber, which indicates that the projector is cooling down.
   - The projector will not turn back on again while it is cooling down.
   - After cool down is finished, the POWER/STANDBY indicator on the top of the projector will light amber, which indicates the standby state. You can now turn the projector back on, if you want.
3. After checking to make sure that the POWER/STANDBY indicator has stopped flashing amber and remains lit, unplug the AC power cord from the power outlet.
   - This causes the POWER/STANDBY indicator to go out.
4. After ensuring that the projector and the connected computer or video device are turned off, disconnect the connecting cables from the projector and the connected device.
5. Close the lens cover.

Auto Power Off

Auto Power Off automatically turns off the projector whenever there is no input signal, and no operation is performed on the projector for about 30 minutes. When Auto Power Off is triggered, the projector first enters a cool down state, the same as it does when you press the [⏻] (power) key to turn it off.

NOTE

- While Direct Power On (page 11) is enabled, the projector will turn off automatically if no key operation is performed and no signal input is received within about 10 minutes after it is turned on.

Projector Basics

NOTE

- For detailed information about projection operations, see the Reference Guide on the CD-ROM that comes with the projector.

Selecting the Input Source

When you turn on the projector, it first checks the RGB terminal for an input signal and then the VIDEO terminal. When it detects an input signal, it automatically selects it and starts projecting the signal.
Whenever you want to manually trigger an input source search operation, press the [INPUT] key.

NOTE

- When the projector detects an input source (RGB, component, or VIDEO) after an auto or manual select operation, the name of the newly selected source will appear in the projected image for a few seconds.
- The message “No signal input.” will appear if no input signal can be selected.

Adjusting the Projected Image

To adjust the size of the projected image

Hold down the [ZOOM +] key to increase the size of the image or the [ZOOM –] key to decrease it. When the image is the size you want, release the key.

Projector key operation

Press the [ZOOM] key and then hold down the [◀] key to increase the size of the image, press the [ZOOM] key and then hold down the [▶] key to decrease it. When the image is the size you want, release the key.

To adjust image focus

Hold down the [FOCUS ▲] or [FOCUS ▼] key. When the focus is the way you want, release the key.

Projector key operation

Press the [FOCUS] key and then hold down the [◀] or [▶] key to focus. When focus is the way you want, release the key.

Auto Adjustment of an RGB Image

When the input source is RGB (computer), the projector automatically adjusts vertical and horizontal positioning, frequency, and phase whenever it detects an RGB signal (following input source selection, power up, etc.). You can also execute an automatic adjustment operation by pressing the [AUTO] key.

NOTE

- You can turn off auto adjustment when you want to disable auto adjustment and maintain manual settings.
- The projected image may become distorted while an auto adjustment operation is in progress.
- If an image is unclear following the auto adjustment operation, you can use the menu to adjust items manually.

Keystone Correction (KEYSTONE)

When the projector is at an angle to the screen it is projecting on, the projected image may have different length top and bottom edges. This phenomenon is called, “keystoning”. This projector comes with functions for automatic as well as manual keystone correction, which provides a regularly shaped projected image.

Important!

- Keystone correction can cause the corrected image to be smaller than the original (uncorrected) image, or it can cause distortion of the image. If the projected image becomes difficult to view, try moving the screen and/or projector so they are oriented close to the configuration shown under “Setting Up the Projector” on page 7.
- The center of the projector’s lens should be aligned with the horizontal center of the screen (page 7).

Automatic Keystone Correction

When “On” is selected for the “Option Settings 1 → Auto Keystone Correction” setting of the Setup Menu, the projector will detect the vertical orientation of the object in the image and adjust its shape automatically so it appears as a rectangle. The message “Auto Keystone Corrected.” appears in the lower left corner of the projected image when the projector performs auto keystone correction.

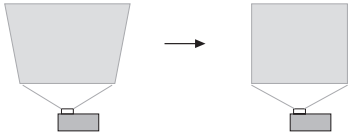

- The projector’s auto keystone correction range is 0 to +30 degrees. If the surface you are projecting onto is angled downwards from horizontal, use manual keystone correction to correct the image.

NOTE

- Auto keystone correction is performed by detecting the elevation angle of the projector. This means that the surface you are projecting onto needs to be standing straight up. If the surface you are projecting onto is not straight, use manual keystone correction to correct the image.

To use manual keystone correction

1. Press the [KEYSTONE +] or [KEYSTONE –] key.
   - This causes the keystone correction screen to appear on the projected image.
2. Use the [KEYSTONE +] and [KEYSTONE –] keys to correct for keystoning.
   - Correction can be performed for keystoning within ±30°.
3. To close the setup screen, press the [ESC] key.

Using the Setup Menu

Pressing the [MENU] key while an image is being projected displays the setup menu on the projected image. The setup menu can be used to configure a variety of different projector settings. Use the cursor keys to select and configure settings, and the [ENTER] key to register them.

The menu items that can be set (or displayed) depend on the current input source. In the following table, the "Input Source" columns indicate whether each item appears (○) or not (×) for each input source (R = RGB, C = Component, V = Video, – = No input signal). A triangle (△) indicates that the item can be set (or displayed), subject to certain conditions.

Main menu / Sub-menu	R	C	V	–
Image Adjustment				
Brightness	○	○	○	×
Contrast	○	○	○	×
Sharpness	×	×	○	×
Saturation	×	×	○	×
Tint	×	×	△	×
Color Mode	○	○	○	×
Color Balance	○	○	○	×
Vertical Position	○	○	○	×
Horizontal Position	○	○	○	×
Frequency	○	×	×	×
Phase	○	×	×	×
Video Mode	×	×	○	×
Restore Menu Defaults	○	○	○	×
Screen Settings				
Keystone Correction	○	○	○	○
Aspect Ratio	×	△	○	×
Projection Mode	○	○	○	○
Startup Screen	○	○	○	○
No Signal Screen	○	○	○	○
Blank Screen	○	○	○	○
Restore Menu Defaults	○	○	○	○
Input Settings				
RGB Input	○	○	×	△
Video Signal	×	×	○	△
Signal Name Indicator	○	○	○	○
Restore Menu Defaults	○	○	○	○

Main menu / Sub-menu	R	C	V	–
Option Settings 1				
Menu Position	○	○	○	○
Auto Keystone Correction	○	○	○	○
Auto Adjust	○	×	×	△
Eco Mode	○	○	○	○
Auto Power Off	○	○	○	○
Direct Power On	○	○	○	○
Language	○	○	○	○
Restore Menu Defaults	○	○	○	○
Option Settings 2				
Zoom Memory	○	○	○	○
Pointer	○	○	○	○
Restore Menu Defaults	○	○	○	○
Operational Info				
Lamp Time	○	○	○	○
Reset Lamp Time	○	○	○	○
Input Signal	○	○	○	○
Signal Name	○	○	○	×
Index	○	○	×	×
Resolution	○	×	×	×
Horizontal Frequency	○	○	○	×
Vertical Frequency	○	○	○	×
Scan System	○	○	×	×
Restore All Defaults	○	○	○	○

- For detailed information about settings and how they are configured, see the Reference Guide on the CD-ROM that comes with the projector.

Troubleshooting

Indicators

The status of the indicators lets you know the current operational status of the projector. This section provides details about indicators.

- "POWER" in the following table stands for the "POWER/STANDBY" indicator.

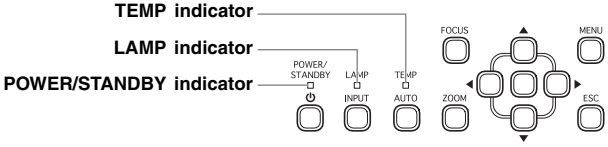

Normal Operation Indicators

When this indicator:	Is this:	It means this:
POWER : TEMP : LAMP :	Amber steady Amber steady Amber steady	You have just plugged the AC power cord into a power outlet. Wait until the projector enters the standby state (see below) before trying to turn on power.
POWER :	Amber steady	Standby state: The AC power cord is plugged in and the projector is in standby.
POWER :	Green flashing	Projector is warming up after being turned on.
POWER :	Green steady	Projector is on and standing by for use.
POWER :	Amber flashing	Projector is cooling down after being turned off. If the projector is hot when you plug the AC power cord into a power outlet, it also goes into a cool down state.
LAMP :	Green steady	The projector's Eco Mode is turned on.

Error Indicators and Warning Messages

When an error occurs, wait until cool down is complete and the fan stops before unplugging the AC power cord. If you unplug the AC power cord while the fan is still operating, an error may occur when you plug the AC power cord back in.

Indicator/Error Message	Description and Required Action
POWER : Green steady TEMP : – LAMP : – Message : Internal temperature is too high. Check projector air vents for blockage.	The projector's internal temperature is very high. Press the [ESC] key to clear the warning message and perform the following steps. ① Check for any blocking of the projector's intake vents and exhaust vents, and make sure that there is sufficient space around the projector. ② If there is dust accumulated around the intake vents and/or exhaust vents, turn off the projector and remove it.

Indicator/Error Message	Description and Required Action
POWER : Amber flashing → Amber steady TEMP : Red flashing (1-second interval) → Turns off LAMP : – Message : Internal temperature is too high. The projector will turn off.	Power has turned off automatically due to internal overheating. Perform the following steps. ① Check for any blocking of the projector's intake vents and exhaust vents, and make sure that there is sufficient space around the projector. ② If there is dust accumulated around the intake vents and/or exhaust vents, remove it. If there is no problem with the projector's vents, confirm that the POWER/STANDBY indicator is lit amber (without flashing), and then turn power back on again. If the error occurs again when you turn power back on, contact InFocus service at www.infocus.com/service
POWER : Amber flashing → Red steady TEMP : Red flashing (0.5-second interval) LAMP : – Message : –	Power has turned off automatically due to internal overheating. This causes a dialog box containing the text in the next item below to appear the next time you turn on the projector. Follow the steps that are provided.
POWER : Green steady TEMP : – LAMP : – Message : The projector has a history of turning off due to high temperature. Check air vents for blockage.	The last time you were using the projector, power turned off automatically due to internal overheating. Press the [ESC] key to clear the warning message and perform the following steps. ① Check for any blocking of the projector's intake vents and exhaust vents, and make sure that there is sufficient space around the projector. ② If there is dust accumulated around the intake vents and/or exhaust vents, turn off the projector and remove it. ③ Disconnect the power cord from the projector and wait for all of the projector's indicators to go out. Next, reconnect the power cord and turn the projector back on. If the error occurs again when you turn power back on, contact InFocus service at www.infocus.com/service
POWER : Amber flashing → Red steady TEMP : Red steady LAMP : Red steady Message : There is a problem with the fan. The projector will turn off.	Power has turned off automatically due to a fan problem. Confirm that the POWER/STANDBY indicator is lit red (without flashing) and that the fan has stopped. After checking the POWER/STANDBY indicator, disconnect the power cord from the projector and wait for all of the projector's indicators to go out. Next, reconnect the power cord and turn projector power back on. If the error occurs again when you turn power back on, contact InFocus service at www.infocus.com/service
POWER : Amber flashing → Red steady TEMP : Red steady LAMP : – Message : A system problem has occurred. The projector will turn off.	Power has turned off automatically due to a system problem. After confirming that the POWER/STANDBY indicator is lit red (without flashing), disconnect the power cord from the projector and wait for all of the projector's indicators to go out. Next, reconnect the power cord and turn the projector back on. If the error occurs again when you turn power back on, contact InFocus service at www.infocus.com/service
POWER : Green steady TEMP : – LAMP : – Message : A system problem has occurred. Some functions may not operate correctly.	A system problem has occurred, which may cause problems with some functions. Turn off the projector, disconnect the power cord from the projector and wait for all of the projector's indicators to go out. Next, reconnect the power cord and turn the projector back on. If the error occurs again when you turn power back on, contact InFocus service at www.infocus.com/service Press the [ESC] key to clear the warning message.

Indicator/Error Message	Description and Required Action
POWER : Green steady TEMP : – LAMP : – Message : Zoom and focus cannot be performed for some reason. Try turning the projector off and then back on again. If this message reappears, request servicing.	Zoom and focus cannot be performed due to some trouble in the optical drive circuit. Turn off the projector and then turn it back on again. If the error occurs again when you turn power back on, contact InFocus service at www.infocus.com/service Press the [ESC] key to clear the warning message.
POWER : Amber flashing → Red steady TEMP : Red steady LAMP : – Message : –	The projector was turned off automatically due to some problem that was probably caused by external digital noise or some other reason. Confirm that the POWER/STANDBY indicator is lit red (without flashing) and that the fan has stopped. After checking the POWER/STANDBY indicator, disconnect the power cord from the projector and wait for all of the projector's indicators to go out. Next, reconnect the power cord and turn projector power back on. If the error occurs again when you turn power back on, contact InFocus service at www.infocus.com/service
POWER : Amber flashing → Red steady TEMP : Red flashing (0.5-second interval) LAMP : Red flashing (0.5-second interval) Message : –	The projector was turned off automatically because the lamp turned off or did not turn on. After confirming that the POWER/STANDBY indicator is lit red (without flashing), unplug the power cord. Wait for a short while and then plug it back in and turn on the projector again. If the error occurs again when you turn power back on, wait until the projector cools down and then replace the lamp (lamp replacement instructions are in the section "Replacing the Lamp" in the Reference Guide on the CD-ROM that comes with the projector). If the lamp does not light after you replace it, contact InFocus service at www.infocus.com/service
POWER : Amber flashing → Red steady TEMP : Red flashing (2-second interval) LAMP : – Message : –	Power has turned off automatically due to a projector memory error. Confirm that the POWER/STANDBY indicator is lit red (without flashing) and that the fan has stopped. After checking the POWER/STANDBY indicator, disconnect the power cord from the projector and wait for all of the projector's indicators to go out. Next, reconnect the power cord and turn projector power back on. If the error occurs again when you turn power back on, contact InFocus service at www.infocus.com/service
POWER : Amber flashing → Red steady TEMP : Amber flashing (1-second interval) LAMP : – Message : –	Power has turned off automatically because the lamp cover is open. Perform the following steps. ① After confirming that the POWER/STANDBY indicator is lit red (without flashing), disconnect the power cord from the projector. ② Check to make sure that the lamp cover is closed. ③ Plug the power cord back in and turn the projector back on again. If the error occurs again when you turn power back on, contact InFocus service at www.infocus.com/service

Indicator/Error Message	Description and Required Action
POWER : Green steady TEMP : – LAMP : Red flashing (1-second interval) Message : It is time to replace the lamp. Use the procedure in the User's Guide to replace the lamp as soon as possible.	It is time to replace the lamp. Replace the lamp following the steps under "Replacing the Lamp" in the Reference Guide on the CD-ROM that comes with the projector. Press the [ESC] key to clear the warning message.
POWER : Amber flashing → Red steady TEMP : – LAMP : Red steady Message : The lamp has exceeded its service life! The projector will not turn on until you replace the lamp.	The allowable life for the lamp has been exceeded, and the projector will not turn on. Replace the lamp following the steps under "Replacing the Lamp" in the Reference Guide on the CD-ROM that comes with the projector.

Projector Troubleshooting

Check the following items whenever you experience any problem with the projector.

Problem	Cause and Recommended Action	See
The projector does not turn on when I press the [⏻] (power) key.	If the POWER/STANDBY indicator is not lit, the AC power cord may not be connected correctly. **→ Make sure the AC power cord is connected correctly to the projector and the power outlet (see "Turning On the Projector").**	page 10
	If the TEMP or LAMP indicator remains flashing or lit, it means some type of error has occurred. **→ See "Error Indicators and Warning Messages" under "Indicators".**	page 16
The projector does not project any image from the connected device.	The connected computer or video device may not be turned on, or it may not be outputting a video signal. **→ Make sure the connected computer or video device is turned on, and perform the required operation on it to output a video signal.**	—
	The correct input source is not selected on the projector. **→ On the projector, select the input source that corresponds to the device whose image you are trying to project (see "Selecting the Input Source").**	page 13
The projector does not correctly project the image from the connected device.	Images may not project correctly when you have the component output terminal of a video device connected to the RGB terminal of the projector. **→ Try using the projector's VIDEO input terminal (see "Connecting to a Standard Video Device").**	page 9
When RGB/ Component is selected as the input source, the color of the projected image or the image itself is abnormal.	The wrong option ("Component" or "RGB") may be selected for the "Input Settings → RGB Input" setting on the setup menu. The image will not be projected correctly if "Component" is selected while the projector's RGB input terminal is connected to the RGB output terminal of a computer, or if "RGB" is selected while the projector's RGB input terminal is connected to the component video output terminal of a video device. **→ Use the setup menu to change the "Input Settings → RGB Input" setting to "Auto" to correct the problem.**	Reference Guide (CD-ROM)
The remote controller does not work.	The remote controller battery may be dead. **→ Replace the battery (see "Replacing the Remote Controller Battery").**	page 6
	The remote controller may be too far from the projector. **→ Make sure the remote controller is within the allowable range when you operate it.**	Reference Guide (CD-ROM)
The TEMP or LAMP indicator is flashing or lit.	**→ See "Error Indicators and Warning Messages" under "Indicators".**	page 16

Problem	Cause and Recommended Action	See
The message “It is time to replace the lamp.” is being projected.	It is time to replace the lamp. **➔ Replace the lamp (see “Replacing the Lamp”).**	Reference Guide (CD-ROM)
The message “The lamp has exceeded its service life!.” is being projected.	The allowable life for the lamp has been exceeded, and the projector will not turn on. **➔ Replace the lamp (see “Replacing the Lamp”).**	Reference Guide (CD-ROM)

Important!

Try performing the following steps, which can return the projector to normal operation.

1. Press the [⏻] (power) key to turn off the projector.
2. After the projector’s cool down is finished and the fan is completely stopped, unplug the AC power cord.
3. Plug the power cord back in and turn the projector back on again.
   * If the power off confirmation message does not appear when you press the [⏻] (power) key, unplug the AC power cord and wait for at least 10 minutes. Then plug the power cord back in and turn the projector back on again.

Service and Support

Questions? We're here to help!
Visit us at: www.infocus.com/service

We're here to support you with your new purchase. We can help you with...
- Determining screen sizes
- Documentation in other languages
- Connecting your sources (TV, DVD, Cable/Satellite, Game, etc.)
- Selecting optional accessories
- Product warranty protection plans

USA, Canada, Latin America	**Asia Pacific**	**Europe, Middle East, Africa**
Customer Support Telephone **+1 (503) 685-8888** TOLL FREE: **800-799-9911** Mon-Fri, 7 am - 5 pm Pacific techsupport@infocus.com	Customer Support Telephone Singapore: **+65 63539449** China: **800.828.2268** Australia: **1300-725-295** Australia Direct Sales: **1800-885-841** Mon-Fri, 9 am - 6 pm SGT asia-support@infocus.com	Customer Support Telephone **+31 (0)36 539 2820** Mon-Fri, 08:30 - 18:00 CET emea.support@infocus.com

⚠ **Warning**	● Hg - Lamp contains mercury. Manage in accordance with local disposal laws. See www.lamprecycle.org

Declaration of Conformity

Manufacturer: InFocus Corporation, 27500 SW Parkway Ave. Wilsonville, Oregon 97070-8238 USA
European Office: Louis Armstrongweg 110, 1311 RL Almere, The Netherlands
We declare under our sole responsibility that this projector conforms to the following directives and norms: EMC Directive 2004/108/EC, EMC: EN 55022, EN 55024, EN 61000-3-2, EN 61000-3-3, Low Voltage Directive 73/23/EEC, Amended by 93/68/EEC, Safety: IEC 60950-1:1st Edition.

Trademarks

Apple, Macintosh, and PowerBook are trademarks or registered trademarks of Apple Computer, Inc. IBM is a trademark or registered trademark of International Business Machines, Inc. Microsoft, PowerPoint, and Windows are trademarks or registered trademarks of Microsoft Corporation. Adobe and Acrobat are trademarks or registered trademarks of Adobe Systems Incorporated. InFocus, In Focus, and INFOCUS (stylized), LP, LiteShow, ScreenPlay, LitePort, ASK and Proxima are either registered trademarks or trademarks of InFocus Corporation in the United States and other countries.

FCC Warning

This equipment has been tested and found to comply with the limits for a Class A digital device, pursuant to part 15 of the FCC Rules. These limits are designed to pro-vide reasonable protection against harmful interference when the equipment is oper-ated in a commercial environment. This equipment generates, uses, and can radiate radio frequency energy and, if not installed and used in accordance with the instruc-tion manual, may cause harmful interference to radio communications. Operation of this equipment in a residential area is likely to cause harmful interference in which case the user will be required to correct the interference at his own expense. Changes or modifications to this equipment that are not expressly approved by InFocus Corp. may void the user's authority to operate the equipment.

EN 55022 Warning

This is a Class A product. In a domestic environment it may cause radio interference, in which case the user may be required to take adequate measures. The typical use is in a conference room, meeting room or auditorium.

Canada

This Class A digital apparatus complies with Canadian ICES-003.
Cet appareil numérique de la classe A est conforme à la norme NMB-003 du Canada.

Agency Approvals Product Models: W150

UL, CUL, NOM, IRAM, GOST, C-tick
Other specific Country Approvals may apply. Please see product certification label.

InFocus reserves the right to alter product offerings and specifications at any time without notice.

IN15

InFocus

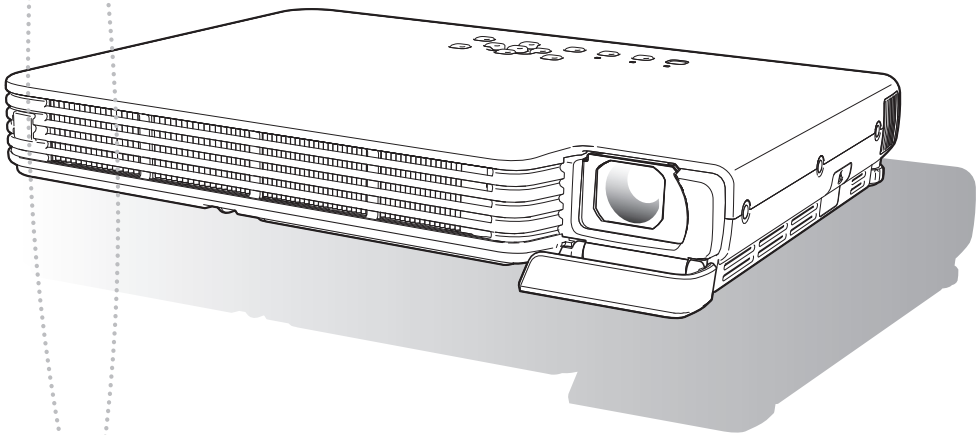

Contents

Contents 1

About this manual... 2

Operation During Projection 3

Image Operations During Projection 3
- Adjusting Image Brightness 3
- Selecting the Color Mode 4
- Zooming an Image 4
- Momentarily Cutting Off the Input Source Image 5
- Freezing an Image 5
- Displaying a Pointer in the Projected Image 6

Changing the aspect ratio of the projected image 7

Eco Mode 7

Using the [FUNC] Key 8

Configuring Advanced Projector Settings 9

Basic Setup Menu Operations 9
- Displaying the Setup Menu 9
- Configuring Setup Menu Settings 9
- Basic Setup Menu Example 10

Restoring Projector Settings to Their Initial Factory Defaults 12

Setup Menu Contents 13
- Image Adjustment Main Menu 14
- Screen Settings Main Menu 16
- Input Settings Main Menu 19
- Option Settings 1 Main Menu 20
- Option Settings 2 Main Menu 22
- Operational Info Main Menu 23
- Restore All Defaults Main Menu 24

User Maintenance 25

Cleaning the Projector 25
- Cleaning the Projector Exterior 25
- Cleaning the Lens 25
- Cleaning Intake and Exhaust Vents 25

Replacing the Lamp 26
To check the current lamp use time 26
When to replace the lamp 26
Replacing the Lamp 27
To replace the lamp 28
Resetting the Lamp Time 29
To reset the lamp time 30
To reset the lamp time after exceeding the lamp life 30

Appendix 31

Remote Controller Signal Range 31
Connecting to a Component Video Output Device 32
Full-screen Display of an RGB Image 33
Reattaching the Lens Cover 34

About this manual...

- All of the operations in this manual are explained using the remote controller that comes with the projector. The following key operations can also be performed on the projector instead of the remote controller: [MENU], [▲], [▼], [▶], [◀], [ENTER], [ESC], [⏻], [INPUT], [AUTO], [ZOOM +], [ZOOM –], [FOCUS ▲], [FOCUS ▼].

To perform this remote controller operation:	Use this projector button:
[ENTER]	Button in the center of the cursor keys
[ZOOM +], [ZOOM –]	[ZOOM] button in combination with the [◀] and [▶] buttons
[FOCUS ▲], [FOCUS ▼]	[FOCUS] button in combination with the [▲] and [▼] buttons

Operation During Projection

This section explains the various types of operations you can perform while the projector is projecting an image.

Image Operations During Projection

You can perform the following operations while projecting an image.

- Image brightness adjustment
- Color mode selection
- Image zooming
- Momentary cut off of the input source image and projection of a black or blue screen, or a logo
- Image freeze
- Pointer display in the projected image
- Aspect ratio switching (between 4:3 and 16:9)

Adjusting Image Brightness

To adjust image brightness

1 **Press the [BRIGHT] key.**

- This displays the brightness adjustment window.



2 **Use the [◀] and [▶] keys to adjust image brightness.**

3 **To hide the window, press the [ESC] key.**

Selecting the Color Mode

You can select from among five different color mode settings to optimize the projected image in accordance with image contents and projection conditions.

To change the color mode

1 **Press the [COLOR MODE] key.**

- This displays the color mode selection window. The currently selected color mode is the one whose button is selected (filled in).

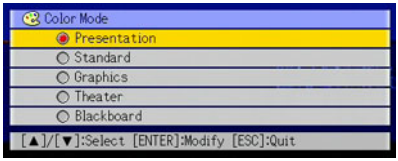

2 **Use the [▼] and [▲] keys to move the highlighting to the color mode you want to select, and then press the [ENTER] key.**

- This will select the button next to the highlighted color mode name.
- For details on what each color mode does, see “Color Mode” under “Image Adjustment Main Menu” on page 14.

3 **To hide the window, press the [ESC] key.**

Zooming an Image

1 **Press the [D-ZOOM +] or [D-ZOOM –] key.**

- This will cause ✚ to appear in the projected image.

2 **Use the cursor keys to move the ✚ to the part of the image that you want in the center of the enlarged image.**

3 **Press (or hold down) the [D-ZOOM +] key.**

- Each press of the [D-ZOOM +] key enlarges the image one step. Holding down the [D-ZOOM +] key continually enlarges the image.
- Pressing the [D-ZOOM –] key while an image is enlarged reduces the zooming by one step. Holding down the [D-ZOOM –] key continually reduces the size of the image.
- While an image is zoomed, you can use the cursor keys to scroll the view to other parts of the image.

4 **To exit the zoom operation, press the [ESC] key.**

Momentarily Cutting Off the Input Source Image

1 **Press the [BLANK] key.**

- This temporarily cuts off the image from the input source and projects a black screen in its place.

2 **To resume projection of the image from the input source, press the [BLANK] key (or [ESC] key).**

Note

You can specify projection of a black screen or blue screen, or a logo. For details, see “Blank Screen” under “Screen Settings Main Menu” on page 18.

Freezing an Image

Pressing the [FREEZE] key freezes the projected image.

To freeze the projected image

1 **While an image is being projected from an input source, press the [FREEZE] key.**

- This will capture the image that is on the screen at the moment you press [FREEZE] and stores it in projector memory. That image remains projected on the screen.

2 **To restore projection of the image from an input source, press the [ESC] key.**

Displaying a Pointer in the Projected Image

You can select from among eight different pointer styles, including various arrow styles, for display in the projected image. Pointers can be used during a presentation to indicate or highlight a specific part of the image.

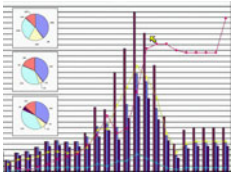

Arrow 1

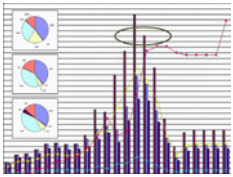

Oval 1

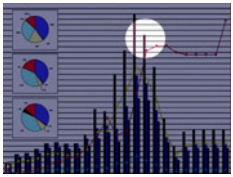

Spot 2

Note

Depending on the pointer style you are using, the pointer may not display properly when you are using keystone correction. If this happens, use the [KEYSTONE +] and [KEYSTONE –] keys to change the keystone correction value to zero.

To display a pointer in the image

1 **Press the [POINTER] key.**

- This will cause a pointer to appear in the image.
- You also can use the setup menu to specify the pointer type that appears first when you press the [POINTER] key. For details, see “Pointer” under “Option Settings 2 Main Menu” on page 22.

2 **Use the cursor keys to move the pointer to the location you want.**

- Holding down a cursor key moves the cursor at high speed.

3 **To modify the pointer as described below, press the [STYLE] key.**

For this pointer type:	Pressing [STYLE] will do this:
Arrow 1 / Arrow 2	Rotate the arrow by 90 degrees
Bar 1 / Bar 2	Toggle between flashing and not flashing
Oval 1 / Oval 2	Toggle between flashing and not flashing
Spot 1 / Spot 2	Cycle the darkness (transparency) of the area not covered by the spot among two levels

To select the pointer type

1 **Press the [POINTER] key to display the pointer.**

2 **Keep pressing the [POINTER] key until the pointer you want is displayed.**

- Each press of the [POINTER] key cycles through the available pointer types.

To clear the pointer from the image

Press the [ESC] key.

Changing the aspect ratio of the projected image

Press the [ASPECT] key to toggle the aspect ratio of the displayed image between 4:3 and 16:9.

Note

- The aspect ratio setting affects the projected image only when the input source is VIDEO or component.
- When the input source is a component signal with an aspect ratio of 16:9, the aspect ratio switches automatically to 16:9. When this happens, pressing the [ASPECT] key will not change the aspect ratio.
- You also can change the aspect ratio setting using the setup menu. For details, see “Aspect Ratio” under “Screen Settings Main Menu” on page 16.

Important!

Note that enlarging or reducing the size of an image using the [ASPECT] key for commercial purposes or public presentation may infringe on the legally protected copyright of the copyright holder of the original material.

Eco Mode

Turning on the Eco Mode reduces lamp brightness to save power. The projector’s cooling fan also operates at a slower speed while the Eco Mode is turned on, which results in quieter operation.
Turn on the Eco Mode when your priority is quieter operation. Turn off the Eco Mode when your priority is maximum brightness.

To turn the Eco Mode on or off

Press [ECO] to toggle the Eco Mode on and off.

Using the [FUNC] Key

Pressing the [FUNC] key displays the menu shown below.

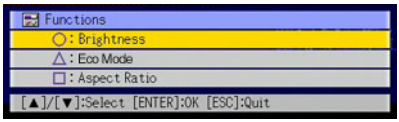

You can use this menu to perform the operations described below.

- **Adjust image brightness**
  Highlight “Brightness” and then press the [ENTER] key.
  - This performs the same operation as pressing the [BRIGHT] key (○ key) described on page 3.
- **Turn the Eco Mode on or off**
  Highlight “Eco Mode” and then press the [ENTER] key.
  - This performs the same operation as pressing the [ECO] key (△ key) described on page 7.
- **Select the aspect ratio of the projected image**
  Highlight “Aspect Ratio” and then press the [ENTER] key.
  - This performs the same operation as pressing the [ASPECT] key (□ key) described on page 7.

Configuring Advanced Projector Settings

Your projector has a setup menu that you can use to configure advanced settings.

Basic Setup Menu Operations

Displaying the Setup Menu

Pressing the [MENU] key displays the menu shown below in the center of the projection screen.

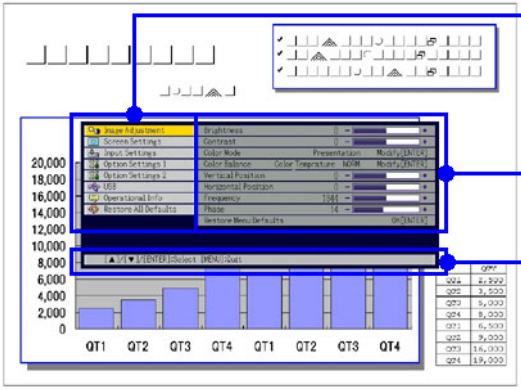

Main menu
The main menu includes seven main menu items. The currently selected main menu item is the one that is highlighted.

Sub-menu
The sub-menu shows each individual setting under each main menu item, and its current setting.

Guidance text
Guidance text provides a brief description of the main key operations available for the operation you are currently performing.

Note

You can position the setup menu in the center or on the left edge of the projection screen. For details, see “Menu Position” under “Option Settings 1 Main Menu” on page 20.

To exit the setup menu

Press the [MENU] key.

Configuring Setup Menu Settings

1 **Press the [MENU] key to display the setup menu.**

2 **Use the [▼] and [▲] keys to select the main menu item you want by highlighting it.**

3 **Press the [ENTER] key.**

4 **Use the [▼] and [▲] keys to select the sub-menu item you want by highlighting it.**

5 **Perform the required operation on the selected sub-menu item screen.**

- The guidance text explains the operations you need to perform to configure each setting.

6 **To return to the main menu from the sub-menu, press the [ESC] key.**

7 **To exit the setup menu, press the [MENU] key.**

Basic Setup Menu Example

The procedure below shows how to configure the following three settings:

- Image Adjustment → Contrast
- Image Adjustment → Color Mode
- Option Settings 1 → Eco Mode

Note

- Certain settings on the setup menu cannot be changed while there is no input signal to the projector. Because of this, you should configure setup menu settings after selecting an input source and starting projection.
- This example covers basic steps only. For more detailed information, see “Setup Menu Contents” on page 13.

To configure the “Image Adjustment → Contrast” setting

1 **Press the [MENU] key to display the setup menu.**

2 **“Image Adjustment” is initially selected on the main menu, so simply press the [ENTER] key.**

3 **Press the [▼] key once to select “Contrast”.**

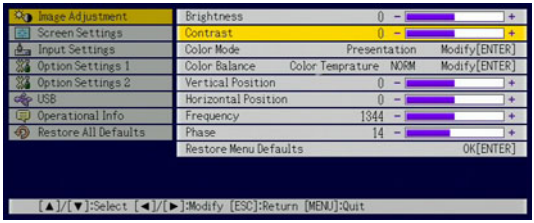

4 **Use the [◀] (lighter) and [▶] (darker) keys to adjust contrast.**

To configure the “Image Adjustment → Color Mode” setting

1 **Press the [▼] key once to select “Color Mode”.**

2 **Press the [ENTER] key.**

- This displays the color mode menu.

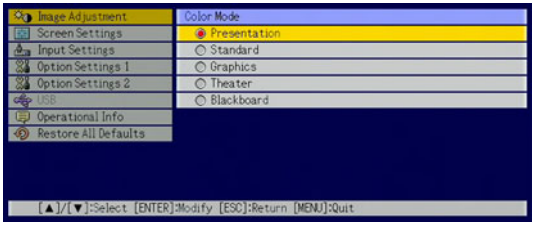

3 **Use the [▼] and [▲] keys to select the color mode you want.**

4 **After selecting the color mode you want, press the [ESC] key.**

To configure the “Option Settings 1 → Eco Mode” setting

1 **Press the [ESC] key.**

2 **Press the [▼] key three times to select “Option Settings 1”.**

3 **Press the [ENTER] key.**

4 **Press the [▼] key three times to select “Eco Mode”.**



5 **Use the [◀] and [▶] keys to select “On” or “Off”.**

6 **After you are finished, press the [MENU] key to exit the setup menu.**

Restoring Projector Settings to Their Initial Factory Defaults

You can use the procedures in this section to restore all of the settings on a particular main menu or all of the settings on the setup menu to their initial factory defaults.

To restore all settings on a particular main menu to their initial factory defaults

1 **Press the [MENU] key to display the setup menu.**

2 **Use the [▼] and [▲] keys to select the main menu whose settings you want to restore to their initial factory defaults.**

- You can select Image Adjustment, Screen Settings, Input Settings, Option Settings 1, or Option Settings 2.

3 **Press the [ENTER] key.**

4 **Use the [▼] key to select “Restore Menu Defaults”.**

5 **Press the [ENTER] key.**

- This will display a confirmation screen like the screen shown below.

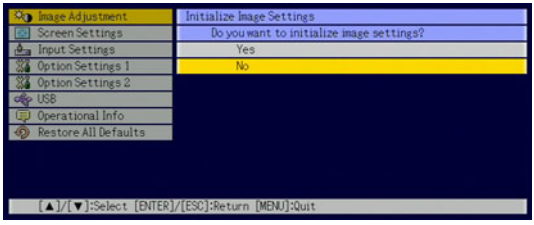

6 **Use the [▲] key to select “Yes”.**

7 **To restore the settings of the main menu to their initial defaults, press the [ENTER] key.**

- To exit the operation without doing anything, press [ESC] instead of [ENTER].

8 **After you are finished, press the [MENU] key to exit the setup menu.**

Note

- The language setting and the password are not returned to their initial factory defaults if you select Option Settings 1 in step 3.
- For details about how the above procedure initializes settings, see the explanations of the settings under “Setup Menu Contents” on page 13.

To restore all settings on the setup menu to their initial factory defaults

1 **Press the [MENU] key to display the setup menu.**

2 **Use the [▼] key to select “Restore All Defaults”, and then press the [ENTER] key.**

- This displays a confirmation message asking if you want to initialize all settings.

3 **Use the [▲] key to select “Yes”.**

4 **To restore all settings on the setup menu to their initial defaults, press the [ENTER] key.**

- This will restore all of the settings to their initial factory defaults, except for the Language, Lamp Time, and password settings.
- To exit the operation without doing anything, press [ESC] instead of [ENTER].

5 **After you are finished, press the [MENU] key to exit the setup menu.**

Setup Menu Contents

This section contains tables that provide detailed explanations of all of the items included on the setup menu. The following describes the type of information that appears in each of the columns of the tables.

Setting Name

This column shows the names of the settings as they appear on the sub-menu.

Input

This column shows the input source for which each setting is supported.

Input source names are abbreviated as R (RGB input), C (component video input), and V (video input). The letter N indicates that the setting can be configured while there is no input signal.

Setting Unit

The setting unit indicates how a setting is stored.

“Source Specific” in this column indicates that separate settings can be stored for each individual input source. For example, you could store an “Image Adjustment → Brightness” setting of –1 for RGB input and a setting of +1 for VIDEO input.

“Single” in this column indicates that a single setting is stored and applied, regardless of the input source.

Description

This column provides details about the setting item and how to select it. The initial default setting is indicated by an asterisk (*).

Image Adjustment Main Menu

Setting Name	Input	Setting Unit	Description
Brightness	RCVU	Source Specific	Use this sub-menu to adjust the brightness of the projected image. A larger value produces a brighter image.
Contrast	RCVU	Source Specific	Use this sub-menu to adjust the contrast of the projected image. A larger value produces a stronger contrast.
Sharpness	V	Source Specific	Use this sub-menu to adjust the sharpness of the outlines in the projected image. A larger value makes the image sharper, while a smaller value makes it softer.
Saturation	V	Source Specific	Use this sub-menu to adjust the color saturation of the projected image. A larger value increases color saturation.
Tint	V	Source Specific	Use this sub-menu to adjust the tint of the projected image. A larger value makes the overall image more bluish, while a smaller value makes the overall image more reddish. This setting is supported only when the signal is NTSC or NTSC4.43.
Color Mode	RCVU	Source Specific	You can select from among five different color mode settings to optimize the projected image in accordance with image contents and projection conditions. **Presentation*:** Use this setting for standard presentations in a well-lit area. This is the initial default setting when the input source is RGB. **Standard:** Use this setting when you want to highlight the colors of your presentation. **Graphics:** Use this setting when you want photographs and graphics to appear natural. **Theater*:** Use this setting to bring out the dark portions of your images. This is the initial default setting when the input source is either component video or video. **Blackboard:** Use this setting for easy viewing when projecting onto a blackboard.
Color Balance	RCVU	Source Specific	This sub-menu lets you adjust the color balance of the projected image. Color balance lets you select either “Color Temperature” or “Color” (for individual adjustment of red, green and blue) as the adjustment method. **Color Temperature:** Select this option when you want to adjust the color temperature. Selecting “LO” gives whites a reddish cast, while “HI” gives them a bluish cast. Selecting “NORM*” sets a medium setting between the two colors. **Color:** Select this option when you want to individually adjust the intensity of red, green, and blue. For all of the colors, a larger value makes the color stronger.

Setting Name	Input	Setting Unit	Description
Vertical Position	RCV	Signal Specific	Use this sub-menu to adjust the vertical position of the input source image within the projection area.
Horizontal Position	RCV	Signal Specific	Use this sub-menu to adjust the horizontal position of the input source image within the projection area.
Frequency	R	Signal Specific	When vertical bands appear in the projected image while RGB is selected as the input source, it means that the frequency setting is not correct. When this happens, use this setting to adjust the frequency manually.  **Important!** If, for some reason, your manual frequency settings cause the image input from the computer to disappear from the projection, you can press the [AUTO] key to perform an auto adjust operation, which should cause the image to appear.
Phase	R	Signal Specific	When there is flickering in the projected image while RGB is selected as the input source, it means that the phase setting is not correct. When this happens, use this setting to adjust the phase manually.
Video Mode	V	Source Specific	This setting is valid when VIDEO is selected as the input source. Use it to select a mode that is optimized for movies or still images. **Normal***: Optimized for movies. **Still Image**: Optimized for still images. In particular, this setting should be used when projecting still images from a digital camera connected to the projector's VIDEO terminal.
Restore Menu Defaults	RCVU	Source Specific	Use this sub-menu to return all of the sub-menu items on the Image Adjustment main menu to their initial default settings. ● Restoring menu defaults when there is no input signal will restore defaults for the currently selected input source. ● "Image Adjustment" main menu "Vertical Position", "Horizontal Position", "Frequency", and "Phase" defaults can be restored for the current signal type (XGA/60Hz, SXGA/60Hz,etc.) only.

About the “Signal Specific” Setting Unit

For the items that have “Signal Specific” in the “Setting Unit” column of the above table, the setting is saved for the specific type of signal (XGA/60Hz, SXGA/60Hz, etc.) that is being input when the setting is performed, and not for a specific input source.

Screen Settings Main Menu

Setting Name	Input	Setting Unit	Description
Keystone Correction	RCVUN	Single	Use this sub-menu to correct vertical keystoning of the projected image.
Aspect Ratio	CV	Source Specific	Use this sub-menu to select one of the following aspect ratios for the projected image. **4:3*:** This setting specifies a 4:3 aspect ratio, which is the same as a standard television. **16:9:** This setting specifies a 16:9 aspect ratio, which is the same as a movie screen, high-definition TV, etc. Using this setting when the input source image is a 16:9 image that has been squeezed to a 4:3 image causes the image to be projected with its normal 16:9 aspect ratio.  **Note** When the input source is a component signal with an aspect ratio of 16:9, the aspect ratio switches automatically to 16:9. When this happens, the aspect ratio cannot be changed using this setting.  **Important!** Note that enlarging or reducing the size of an image for commercial purposes or public presentation may infringe on the legally protected copyright of the copyright holder of the original material.

Setting Name	Input	Setting Unit	Description
Projection Mode	RCVUN	Single	Use this sub-menu to specify whether projection will be from the front of the screen or the back of the screen. ***:** Select this option when projecting from the front of the screen. **:** Select this option when projecting from the back of the screen. **:** Select this option to flip the back-projected image vertically. **:** Select this option to flip the image vertically. **Important!** The lamp originally installed in this projector is model SP-LAMP-035, which is intended for tabletop (non-inverted) use. Do not use this lamp in ceiling mounted (inverted) applications. For ceiling mount (inverted) application, use lamp model SP-LAMP-036 instead, which is specifically designed for that purpose. Use of the wrong lamp will significantly reduce lamp life and void the lamp warranty (and if use of the wrong lamp results in damage to the projector, it will also void the projector warranty).
Startup Screen	RCVUN	Single	Use this sub-menu to specify whether or not a startup screen should be projected whenever the projector is turned on. **Logo*:** Select this option to project the projector's built-in logo screen at startup. **None:** Select this option when you do not want to project a startup screen.
No Signal Screen	RCVUN	Single	Use this sub-menu to specify what should be projected when there is no input signal to the projector. **Blue*:** Select this option to project a blue screen. **Black:** Select this option to project a black screen. **Logo:** Select this option to project the projector's built-in logo screen.

Setting Name	Input	Setting Unit	Description
Blank Screen	RCVUN	Single	Use this sub-menu to specify what should be projected after the [BLANK] key is pressed. **Blue:** Select this option to project a blue screen. **Black*:** Select this option to project a black screen. **Logo:** Select this option to project the projector's built-in logo screen.
Restore Menu Defaults	RCVUN	Source Specific	Use this sub-menu to return all of the sub-menu items on the Screen Settings main menu to their initial default settings. ● Restoring menu defaults when there is no input signal will restore defaults for the currently selected input source. ● Note that the "Keystone Correction", "Projection Mode", "Startup Screen", "No Signal Screen", and "Blank Screen" settings are always returned to their initial defaults, regardless of the currently selected input source.

Input Settings Main Menu

Setting Name	Input	Setting Unit	Description
RGB Input	RC N	Single	Use this sub-menu to specify manually the type of signal being input from the projector's RGB input terminal. **Auto*:** Automatically detects the signal being input from the RGB input terminal and configures the appropriate input protocol. **RGB:** Select this option when a computer is connected to the RGB input terminal. For details about connecting a computer, see "Connecting a Computer to the Projector" in the "User's Guide". **Component:** Select this setting when the projector's RGB input terminal is connected to the component video output terminal of a video device using an optionally available YK-3 component video cable. For information about connection, see "Connecting to a Component Video Output Device" on page 32.
Video Signal	V N	Single	Use this sub-menu to specify manually the type of signal being input from the projector's VIDEO input terminal. **Auto*:** Select this setting to have the projector switch the video signal system automatically in accordance with the input signal from the video device that is connected to the VIDEO input terminal. **NTSC / NTSC4.43 / PAL / PAL-M / PAL-N / PAL60 / SECAM:** Each setting selects the applicable video system. Use these settings when you want to specify only one specific video signal for the VIDEO input terminal.
Signal Name Indicator	RCVUN	Single	Use this sub-menu to specify whether or not the name of the currently selected signal source should be displayed in the projected image. **On*:** Select this option to turn on display of the name of the currently selected signal source in the projected image. **Off:** Select this option to turn off display of the signal source name.
Restore Menu Defaults	RCVUN	Source Specific	Use this sub-menu to return all of the sub-menu items on the Input Settings main menu to their initial default settings. ● Restoring menu defaults when there is no input signal will restore defaults for the currently selected input source. ● Note that the "Signal Name Indicator" setting is always returned to its initial default, regardless of the currently selected input source.

Option Settings 1 Main Menu

Setting Name	Input	Setting Unit	Description
Menu Position	RCVUN	Single	Use this sub-menu to specify the display position of the setup menu as either the center or the left side of the screen. ***:** Select this option to display the setup menu in the center of the screen. **:** Select this option to display the setup menu on the upper left corner of the screen.
Auto Keystone Correction	RCVUN	Single	Use this sub-menu to turn auto keystone correction on or off. **On*:** Select this option to turn on auto keystone correction. **Off:** Select this option to turn off auto keystone correction.
Auto Adjust	R N	Single	Use this sub-menu to specify whether or not auto adjust should be performed when RGB is selected as the input source. **On*:** Select this option to turn on auto adjust. **Off:** Select this option to turn off auto adjust.
Eco Mode	RCVUN	Single	Use this sub-menu to turn the Eco Mode on or off. **On:** Select this option to reduce lamp brightness and save power. This setting also reduces the speed of the projector's cooling fan, which reduces operation noise. **Off:** Select this option to project at maximum brightness.
Auto Power Off	RCVUN	Single	Use this sub-menu to turn Auto Power Off on or off. See "Turning Off the Projector" in the "User's Guide" for more information. **On*:** Select this option to turn on Auto Power Off. **Off:** Select this option to turn off Auto Power Off.

Setting Name	Input	Setting Unit	Description
Direct Power On	RCVUN	Single	Use this sub-menu to turn Direct Power On on or off. See “Direct Power On” in the “User’s Guide” for more information. **On:** Select this option to turn on Direct Power On. **Off*:** Select this option to turn off Direct Power On.  **Important!** While Direct Power On is enabled, the projector will turn off automatically if no key operation is performed and no signal input is received within about 10 minutes after it is turned on. This is true regardless of the current Auto Power Off setting.
Language	RCVUN	Single	Use this sub-menu to specify the language to use for messages, setup menus, etc. English / French / German / Italian / Spanish / Swedish / Chinese (Simplified) / Chinese (Traditional) / Korean / Japanese
Restore Menu Defaults	RCVUN	Single	This sub-menu returns all of the sub-menu items on the Option Settings 1 main menu to their initial default settings. ● Restoring menu defaults when there is no input signal will restore defaults for the currently selected input source. ● The “Auto Adjust” item is returned to its initial default only when RGB input is selected for the input source. All of the other items are returned to their initial defaults regardless of the currently selected input source.

Option Settings 2 Main Menu

Setting Name	Input	Setting Unit	Description
Zoom Memory	RCVUN	Single	Use this sub-menu to turn zoom memory on or off. Zoom memory lets you save the zoom setting when the projector is turned off, so it can be restored automatically the next time the projector is turned on. **On*:** Select this option when you want to restore the zoom setting that was in effect when the projector was last turned off, whenever it is turned on. **Off:** Select this option when you want the image to be projected at its maximum size whenever you turn on the projector.
Pointer	RCVUN	Single	Use this sub-menu to specify the type of pointer that appears first when you press the [POINTER] key. **Arrow 1* / Arrow 2 / Bar 1 / Bar 2 / Oval 1 / Oval 2 / Spot 1 / Spot 2**
Restore Menu Defaults	RCVUN	Single	This sub-menu returns all of the sub-menu items on the Option Settings 2 main menu to their initial default settings.

Operational Info Main Menu

Setting Name	Input	Setting Unit	Description
Lamp Time	RCVUN	Single	This sub-menu item shows the cumulative number of hours the current lamp has been used to date. Use this value as a reference when deciding whether or not the current lamp needs to be replaced. For details about replacing the lamp, see “Replacing the Lamp”.
Reset Lamp Time	RCVUN	Single	Use this submenu item to reset the lamp time to 0 hours after replacing the lamp. For details about replacing the lamp and the lamp time reset operation, see “Replacing the Lamp”.
Input Signal	RCVUN	Source Specific	This sub-menu item shows the currently selected input signal (RGB, Component, or VIDEO). “- - - -” is indicated here when there is no input signal.
Signal Name	RCV	Source Specific	This sub-menu item shows the signal name of the signal being input to the projector.
Index	RC	Source Specific	This sub-menu item appears only when RGB or component is the input signal. It shows projector internal information.
Resolution	R	Single	This sub-menu item appears only when RGB is the input signal. It shows the number of vertical pixels of resolution of the RGB input signal.
Horizontal Frequency	RCV	Source Specific	This sub-menu item shows the horizontal frequency of the input signal.
Vertical Frequency	RCV	Source Specific	This sub-menu item shows the vertical frequency of the input signal.
Scan System	RC	Source Specific	This sub-menu item appears only when RGB or component is the input signal, and shows the scanning frequency of the input signal. The input signal is interlace or non-interlace for an RGB signal input, and interlace or progressive for a component signal input.

Restore All Defaults Main Menu

Setting Name	Input	Setting Unit	Description
Restore All Defaults	RCV N	Single	This sub-menu returns all sub-menu items on all main menus to their initial default settings. This operation can be performed regardless of the currently selected input source and regardless of whether or not a signal is currently being input. For details about this procedure, see “To restore all settings on the setup menu to their initial factory defaults” on page 13.
Unit Operating Time	RCVUN	Single	This sub-menu item shows the cumulative operating time of this unit. This time cannot be initialized.

Cleaning the Projector

Periodically clean the projector exterior, lens, intake vents, and exhaust vents on a regular basis.

Important!

- Always make sure that the projector has cooled sufficiently before cleaning it. If the projector is turned on, perform the following steps before cleaning it.

1 **Turn off the projector.**

2 **Check to make sure that the POWER/STANDBY indicator has changed to amber.**

3 **Unplug the power cord from the power outlet, and allow the projector to cool down for about 60 minutes.**

Cleaning the Projector Exterior

Wipe the exterior of the projector with a soft cloth that has been moistened in a weak solution of water and a mild neutral detergent. Be sure to wring all excess moisture from the cloth before wiping.

Never use benzene, alcohol, thinner, or any other volatile agent for cleaning.

Cleaning the Lens

Carefully wipe the lens with a commercially available lens cloth or optical lens paper, like those for eyeglasses or camera lenses. When cleaning the lens, be very careful to avoid scratching it.

Cleaning Intake and Exhaust Vents

Dust and dirt tend to collect around the intake vents located on the back and both sides of the projector. Because of this, you should use a vacuum cleaner to clean away accumulated dust and dirt periodically as shown below.

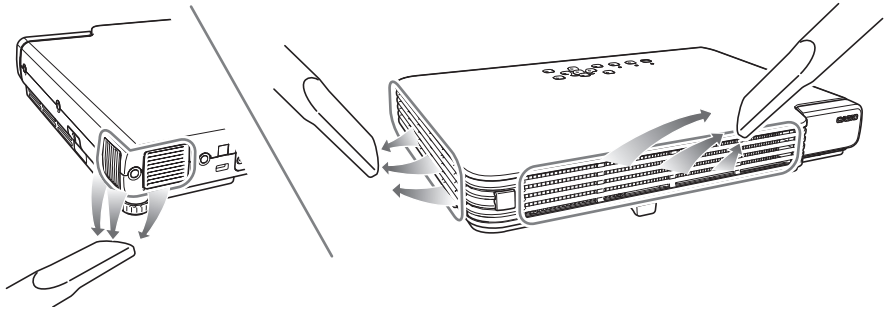

Important!

- Continued use of the projector after dust has accumulated around the intake vents can cause overheating of internal components and lead to malfunction.
- Certain operating conditions also can cause dirt and dust to accumulate around the projector's exhaust vents on the front. If this happens, use the same procedure as that described above to clean the exhaust vents.

Replacing the Lamp

Caution

Continued use of a lamp that has passed its lamp life increases the risk of the lamp rupturing. Replace the lamp with a new one as soon as possible after the replacement message appears.

- The light source lamp is a consumable item. The average life of a lamp is approximately 2000 hours. After 2000 hours, a message appears to alert you to the need of lamp replacement. However, note that the characteristics of a particular lamp or lamp operating conditions can cause the lamp to start to go dim or even fail before the message appears.

To check the current lamp use time

1 **Press the [MENU] key to display the setup menu.**

2 **Press the [▼] key to select the "Operational Info" main menu.**

- The "Lamp Time" sub-menu item shows the number of hours that the current lamp has been used.

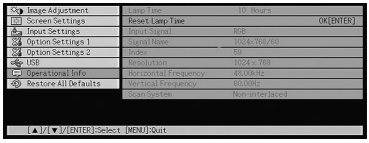

3 **Press the [MENU] key to exit the setup menu.**

When to replace the lamp

The LAMP indicator starts to flash red and the message shown below appears whenever the lamp time exceeds 2000 hours.

It is time to replace the lamp. Use the procedure in the User's Guide to replace the lamp as soon as possible.

When this message appears, replace the lamp as soon as possible using the procedure under "Replacing the Lamp" on page 27.

Note that the above message will disappear about 10 seconds after you turn on the projector, even if you do not replace the lamp.

You will be able to continue using the projector without replacing the lamp until the lamp time reaches 100 hours. At that time, the LAMP indicator will stop flashing and remain lit red, the following message will appear for about 10 seconds, and then the projector will turn off automatically.

The lamp has exceeded its service life! The projector will not turn on until you replace the lamp.

When this message appears, replace the lamp immediately using the procedure under "Replacing the Lamp" on page 27.

Replacing the Lamp

Important!

- The lamp originally installed in this projector is model SP-LAMP-035, which is intended for tabletop (non-inverted) use. Do not use this lamp in ceiling mounted (inverted) applications. For ceiling mount (inverted) application, use lamp model SP-LAMP-036 instead, which is specifically designed for that purpose. Use of the wrong lamp will significantly reduce lamp life and void the lamp warranty (and if use of the wrong lamp results in damage to the projector, it will also void the projector warranty).
- You can order new lamps from www.infocus.com (in select areas), your retailer or your dealer.

Caution

- During normal use, the lamp and the area around it become extremely hot. Before replacing the lamp, turn off the projector and wait for the cool down operation (indicated when the POWER/STANDBY indicator is flashing amber) to finish. Next, disconnect the AC power cord from the projector, and wait for at least 60 minutes to allow it to cool down even further.
  Touching the lamp or the area around it during operation or immediately after turning off the projector creates the risk of serious burn injury.
- Only InFocus lamps are tested and certified for use in this projector. InFocus is not liable for the performance, safety or certification of any other lamps. The use of other lamps may cause electrical shock and fire and violates the projector warranty and voids all certification marks on this projector.
- See the safety instructions booklet for important safety information about ceiling mounting this projector.
- A mercury lamp with high internal pressure is used as the light source. A lamp that is weakened by impact, damage, or expiration of its lamp life may explode or fail to light if exposed to loud noise. Note that lamp life differs greatly from lamp to lamp, and is affected by conditions under which the lamp is used.
- Never touch the glass of the lamp with your fingers. Doing so can cause the lamp to rupture and shorten its life.
- A broken lamp can cause glass fragments to be scattered inside the lamp housing. Gas inside of the lamp housing may also be discharged from the projector's vent exhaust ports. Gas inside of the lamp includes mercury, so be sure to ventilate the area whenever the lamp breaks. Should you accidentally inhale gas fumes or should gas fumes get into your eyes, immediately contact a physician.
- Should the lamp break, take care to avoid personal injury on the glass fragments. Never try to replace a broken lamp on your own. Contact InFocus service (www.infocus.com) to request a replacement.

Warning

Hg - Lamp contains mercury. Manage in accordance with local disposal laws. See www.lamprecycle.org.

To replace the lamp

Important!

When replacing the lamp, use the special screwdriver that comes with the replacement lamp. The projector does not come with a screwdriver.

1 **Turn off the projector and unplug its AC power cord.**

2 **Wait for about 60 minutes to allow the projector's current lamp to cool down completely.**

3 **Turn over the projector and place it on top of a desk or on some other stable surface.**

4 **Loosen the lamp cover screw, and then remove the lamp cover.**

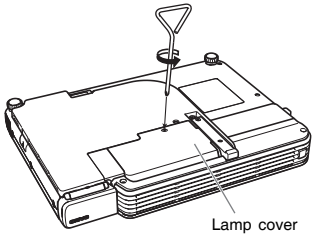

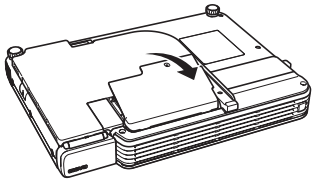

5 **Loosen the three screws indicated by an ▲ mark.**

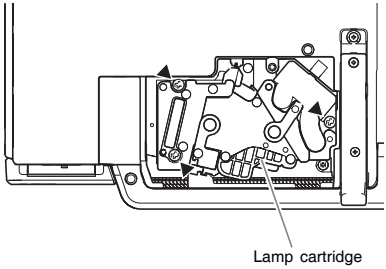

6 **Use the lamp cartridge handle to pull the lamp cartridge from the projector.**

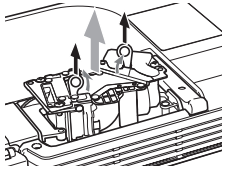

7 **Insert the new lamp cartridge as far as it will go, as shown in the illustration.**

- After inserting the lamp cartridge, lay its handle down in the position shown in the illustration under step 5 on this page.

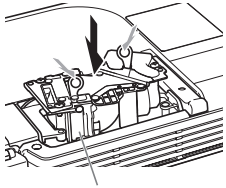

Make sure the grooves of the lamp cartridge align with the grooves of the lamp housing.

Caution

Take care to avoid touching the lamp (glass) and the mirrors inside the projector. Doing so can cause the lamp to rupture, shorten lamp life, and otherwise affect lamp performance.

8 **Secure the lamp cartridge with the three screws.**

9 **Return the lamp cover to its original position, and secure it with the screw.**

- After replacing the lamp, be sure to perform the procedure under “Resetting the Lamp Time” on page 29.

Resetting the Lamp Time

The lamp time reset operation you need to perform depends on when you replace the lamp.

It is time to replace the lamp. Use the procedure in the User’s Guide to replace the lamp as soon as possible.

If you replace the lamp when the above message appears, use the procedure under “To reset the lamp time”.

The lamp has exceeded its service life! The projector will not turn on until you replace the lamp.

If you replace the lamp after the above message appears, use the procedure under “To reset the lamp time after exceeding the lamp life”.

To reset the lamp time

1 **Turn on the projector.**

2 **Press the [MENU] key to display the setup menu.**

3 **Press the [▼] key to select “Operational Info”, and then press the [ENTER] key.**

4 **Press the [ENTER] key.**
- This causes the message “Reset Lamp Time?” to appear.

5 **Press the [▲] key to select “Yes” and then press the [ENTER] key.**
- This resets the lamp time to 0 hours.

6 **Press the [MENU] key to exit the setup menu.**
- This causes the setup menu to disappear from the projected image.

To reset the lamp time after exceeding the lamp life

If you use the existing lamp until its life is exceeded, you will not be able to turn on the projector even after you replace the lamp with a new one. Perform the following procedure to initialize the lamp time in this case, which will make it possible to turn on the projector.

1 **Use the bundled AC power cord to plug the projector into a power outlet.**
- Connecting to a power outlet causes the POWER/STANDBY and LAMP indicators on the top of the projector to light red, which indicates that the lamp has exceeded its service life.

2 **While holding down the projector’s [◀] key, hold down the [AUTO] key for about five seconds.**
- This will reset the lamp time, cause the POWER/STANDBY indicator to change from red to amber, and also cause the LAMP indicator to go out.

3 **Press the [⏻] (power) key to ensure that the projector turns on normally.**

Remote Controller Signal Range

When performing an operation on the remote controller, point it at the remote control signal receiver on the back or front of the projector. The following illustration shows the range of the remote controller signal.

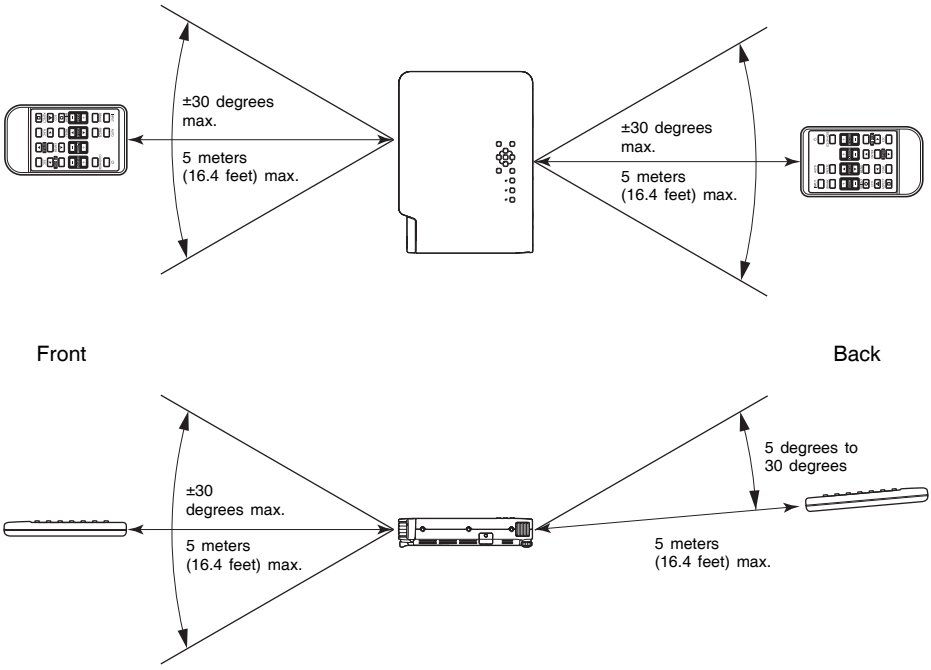

Remote Controller Range

The allowable distance between the remote controller and the projector is less when there is a sharp angle between the remote controller and the remote control signal receiver.

Important!

To avoid running down the battery, store the remote control unit so its buttons are not pressed inadvertently.

Connecting to a Component Video Output Device

Some video devices are equipped with a component video output terminal. You can use an optionally available **VESA to component video adapter (SP-VESA-ADPT-R)** and a component video cable to connect the RGB input terminal of the projector to the component video output terminal of a video device.

Important!

Always turn off the projector and the video device before connecting them.

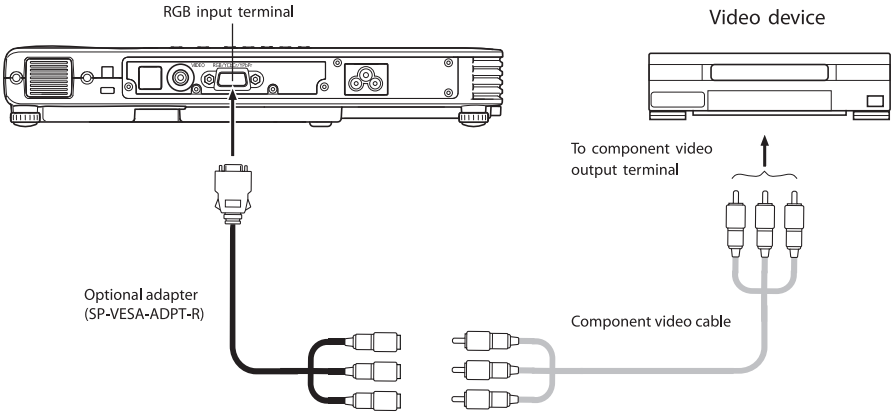

- Component video output terminals come in 3-terminal sets: Y·Cb·Cr or Y·Pb·Pr. Be sure to match the colors of the plugs on the optional adapter with the colors of the terminals (Green: Y; Blue: Cb/Pb; Red: Cr/Pr).
- Note that connection only to an analog component video output terminal is supported. Connection to a digital output terminal is not supported.

Full-screen Display of an RGB Image

The projector outputs images using XGA (1024 pixels × 768 pixels) video resolution. When the input signal from the computer connected to the projector is not an XGA signal, “Resize Image To Fit” automatically enlarges or reduces the image so it matches the projector’s video resolution and fills the entire screen. The following shows how different input signals from a computer are adjusted during projection.

Input Signal Example	Projected Image
800 × 600 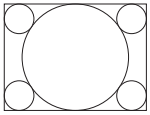	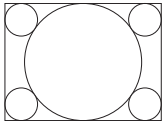
1024 × 768 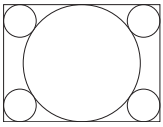	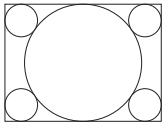
1280 × 1024 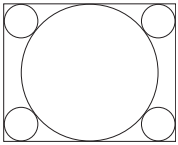	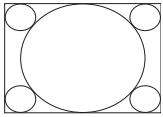 When the input signal has a resolution of 1280 × 1024 (aspect ratio: 5:4), the original image is compressed so it conforms to the projection resolution of 1024 × 768 (aspect ratio: 4:3). Because of this, the projected image may appear slightly wider horizontally than the original image.

Reattaching the Lens Cover

Use the following procedure to replace the lens cover if it should accidentally become detached from the projector.

1 **Insert the nub (③) of the left tab of the lens cover into the depression (①) of the tab under the lens.**

- When performing the above step, make sure that the lens cover is open to 90 degrees in relation to the front of the Data Projector.

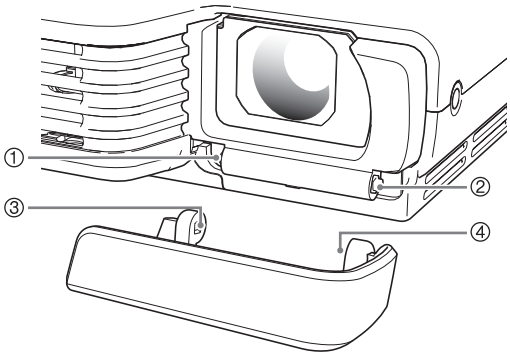

2 **Keeping the left nub (③) in the left depression (①), gently press the lens cover towards the right as you insert the nub (④) of the right lens cover tab into the depression (②) of the right tab under the lens.**

- Do not apply undue force to the lens cover when performing the above step. Pressing too strongly can damage the tabs of the lens cover.

